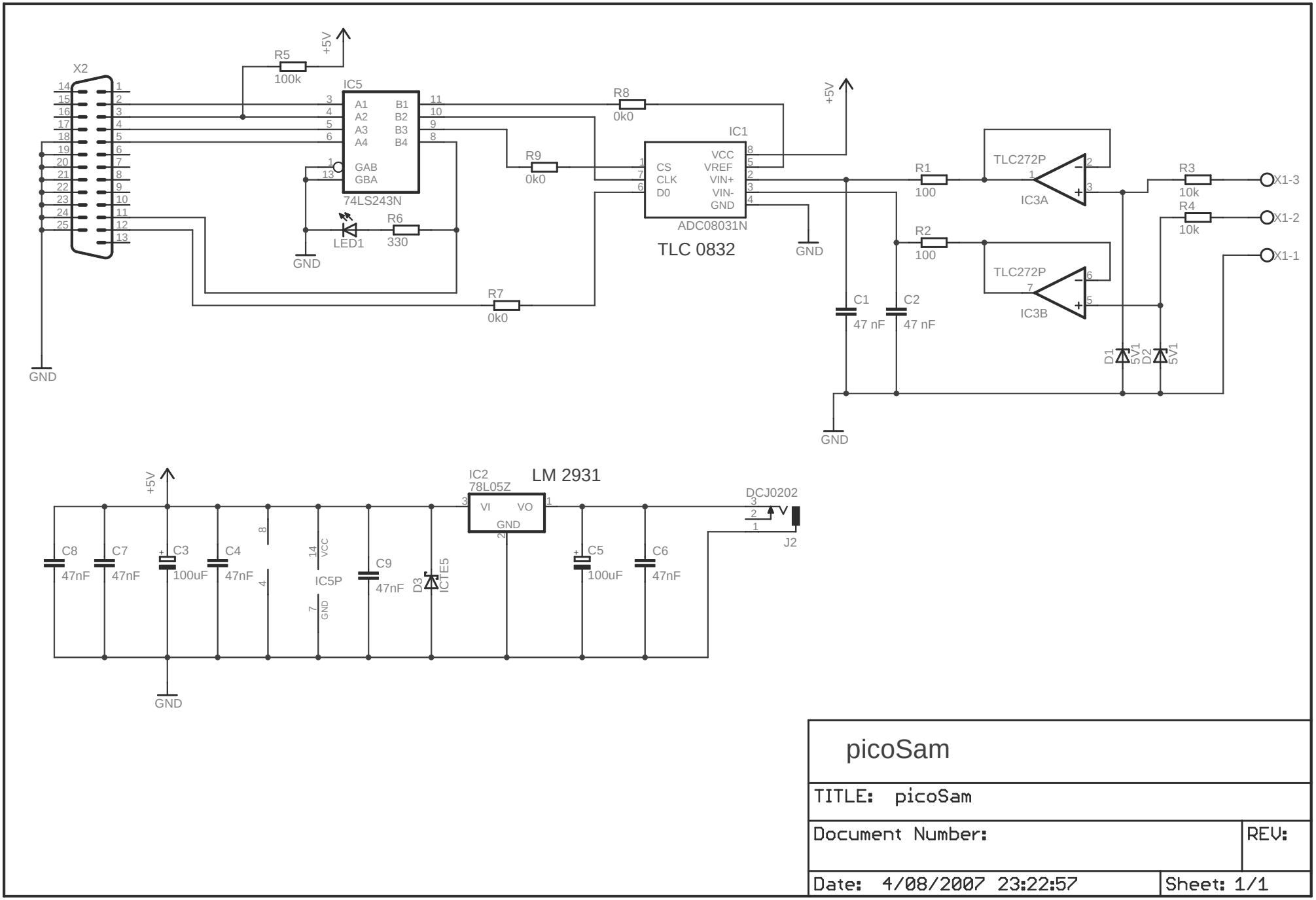
X2
R5
100k
+5V
IC5
A1 A2 A3 A4
B1 B2 B3 B4
GAB
GBA
74LS243N
LED1
R6
330
GND
R7
0k0
R8
0k0
R9
0k0
IC1
CS
CLK
D0
VCC
VREF
VIN+
VIN-
GND
ADC08031N
TLC 0832
R1
100
R2
100
TLC272P
IC3A
IC3B
R3
10k
R4
10k
X1-3
X1-2
X1-1
C1
47 nF
C2
47 nF
D1
5V1
D2
5V1
IC2
78L05Z
LM 2931
VI
VO
DCJ0202
J2
C8
47nF
C7
47nF
C3
100uF
C4
47nF
IC5P
VCC
GND
C9
47nF
D3
ICTE5
C5
100uF
C6
47nF
picoSam
TITLE: picoSam
Document Number:
REV:
Date: 4/08/2007 23:22:57
Sheet: 1/1